BASE

Rotary limit switch

Rotary limit switch used to control and measure the movement of industrial machines.
Its compact size makes it suitable for use in narrow spaces.

FEATURES

- It consists of a gear motor that transfers movement to the cams through a primary input reduction stage (worm gear and helical toothed gear) and one or more secondary output stages (pairs of straight toothed gears).
- Accurate adjustment of cams by means of screws.
- Positive opening NC contacts for safety functions.
- Mechanical life of switches: 1 million operations.
- IP protection degree: Base is classified IP 42, IP 65 or IP 65 / IP 66 / IP 67 / IP 69K.
- NEMA protection degree: Base IP 65 / IP 66 / IP 67 / IP 69K is classified Type 4.
- Extreme temperature resistance: -40°C to +80°C.
- It features stainless steel AISI 430F transmission and gear driving shafts, self-lubricating technopolymer gears and driving bushes, technopolymer base and cover.
- Sintered bronze bushes are moulded into the base of the limit switch to optimize shaft rotation and prevent rubbing with plastic material.
- All materials and components used are wear resistant and guarantee protection of the unit against water and dust.

OPTIONS

- Revolution ratios from 1:15 to 1:1500, achieved by combining different secondary output stages.
- Snap action switches with 1NO+1NC contacts.
- It can be equipped with a cam set with up to 6 switches.
- Dedicated cable glands or connectors.
- Available with anti-moisture plug fitted to the base by means of a lock nut, improving transpiration while maintaining protection against water.
- Available with flanges, pinion gears and couplings.
- Available with direct control switches to enable direct action on the motor.

CERTIFICATIONS

- CE marking and cURus* marking.
- Complying with accident prevention regulation BGV C 1 (only for Germany).

Use the online configurator (https://configuratore.terworld.com) or fill in the "request form" for accurate product configuration.

The data and the products illustrated in this brochure may be modified without notice. Under no circumstances can their description have a contractual value.

* Not available on all versions.

POSSIBLE ASSEMBLIES

IP42 with 2 switches

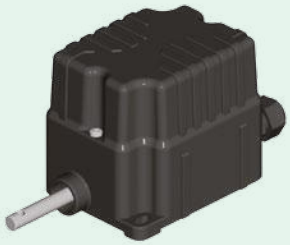

IP 65 / IP 66 / IP 67 / IP 69K with 2 or 3 switches and flange

IP 65 / IP 66 / IP 67 / IP 69K with 4 switches

With anti-moisture plug

CERTIFICATIONS

Conformity to Community Directives	2014/35/UE Low Voltage Directive
	2006/42/CE Machinery Directive
Conformity to CE Standards	EN 60204-1 Safety of machinery - Electrical equipment of machines
	EN 60204-32 Safety of machinery - Electrical equipment of machines - Requirements for hoisting machines
	EN 60947-1 Low-voltage switchgear and controlgear
	EN 60947-5-1 Low-voltage switchgear and controlgear - Control circuit devices and switching elements - Electromechanical control circuit devices
	EN 60529 Degrees of protection provided by enclosures
Conformity to cULus Standards	CSA-C22.2 No 14-13 Industrial Control Equipment
	UL 508 Industrial Control Equipment
BGV C 1	Regulations for the prevention of accidents BGV C 1 (only for Germany)
Markings and homologations	Version IP 42 and IP 65: CE
	Version IP 65 / IP 66 / IP 67 / IP 69K: CE cULus *

GENERAL TECHNICAL SPECIFICATIONS

Ambient temperature	Storage -40°C/+80°C
	Operational -40°C/+80°C
IP protection degree	IP 42
	IP 65
	IP 65 / IP 66 / IP 67 / IP 69K
NEMA protection degree	Type 4 (version IP 65 / IP 66 / IP 67 / IP 69K)
Insulation category	Class II
Rotation speed	Max. 800 rpm
Cable entry	Cable gland M16
Shafts	Stainless steel AISI 430F

* Not available on all versions.

TECHNICAL SPECIFICATIONS OF THE SWITCHES FOR AUXILIARY CONTROL

Code	PRSL0003XX	PRSL0011XX	PRSL0017XX	PRSL0195XX
Utilisation category	AC 15 - B300		AC 15 - C300	
Rated operational voltage	250 Vac			
Rated operational current	3 A			
Rated thermal current	5 A		2.5 A	
Rated insulation voltage	300 Vac			
Mechanical life	$1x10^6$ operations			
Connections	6.3 mm Faston taps	Screw-type terminals	Screw-type terminals	6.3 mm Faston taps
Wires	-	2x0.5mm², 2x1.5 mm², 1x2.5 mm²	2x0.5mm², 2x1.5 mm², 1x2.5 mm²	-
Tightening torque	-	0.5 Nm	0.5 Nm	-
Switch type	Single break, snap action			
Contacts	1NO+1NC (All NC contacts are of the positive opening operation type ⊖)	1NO+1NC	1NO+1NC	1NO+1NC
Scheme	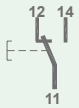			
Markings and homologations	CE cULus		CE cULus	

TECHNICAL SPECIFICATIONS OF THE SWITCHES FOR DIRECT CONTROL

Code	PRSL0455PI
Utilisation category	AC 3
Rated operational current	400 Vac
Rated operational voltage	10 A
Rated thermal current	20 A
Rated insulation voltage	660 Vac
Mechanical life	$1x10^6$ operations
Connections	Screw-type terminals
Wires	2x1.5 mm², 1x2.5 mm²
Tightening torque	0.8 Nm
Switch type	Two-pole switch
Contacts	2NC
Scheme	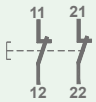
Markings and homologations	CE

OVERALL DIMENSIONS (mm)

Limit switches with sets of cams and 5 or 6 switches PRSL0003XX / PRSL0011XX / PRSL0017XX / PRSL0195XX or with 2 switches PRSL0455PI are available only with protection degree IP 65 / IP 66 / IP 67 / IP 69K and a special cover, or in the IP 00 version without cover. Both configurations are not cURus certified. Overall dimensions and code numbers are available on request.

IP 42 or IP 65

* 2 switches PRSL0003XX / PRSL0011XX / PRSL0017XX / PRSL0195XX or 1 switch PRSL0455PI.
( ) 3/4 switches PRSL0003XX / PRSL0011XX / PRSL0017XX / PRSL0195XX.

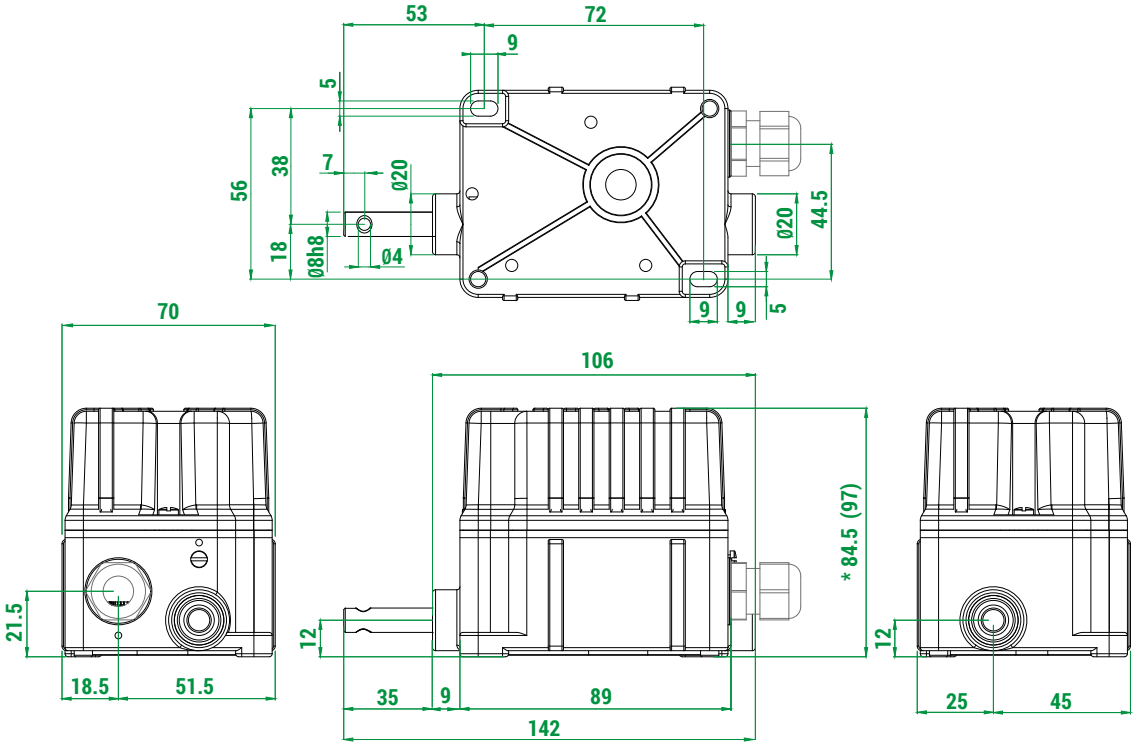

IP 65 / IP 66 / IP 67 / IP 69K

* 2/3 switches PRSL0003XX / PRSL0011XX / PRSL0017XX / PRSL0195XX or 1 switch PRSL0455PI.
( ) 4 switches PRSL0003XX / PRSL0011XX / PRSL0017XX / PRSL0195XX.

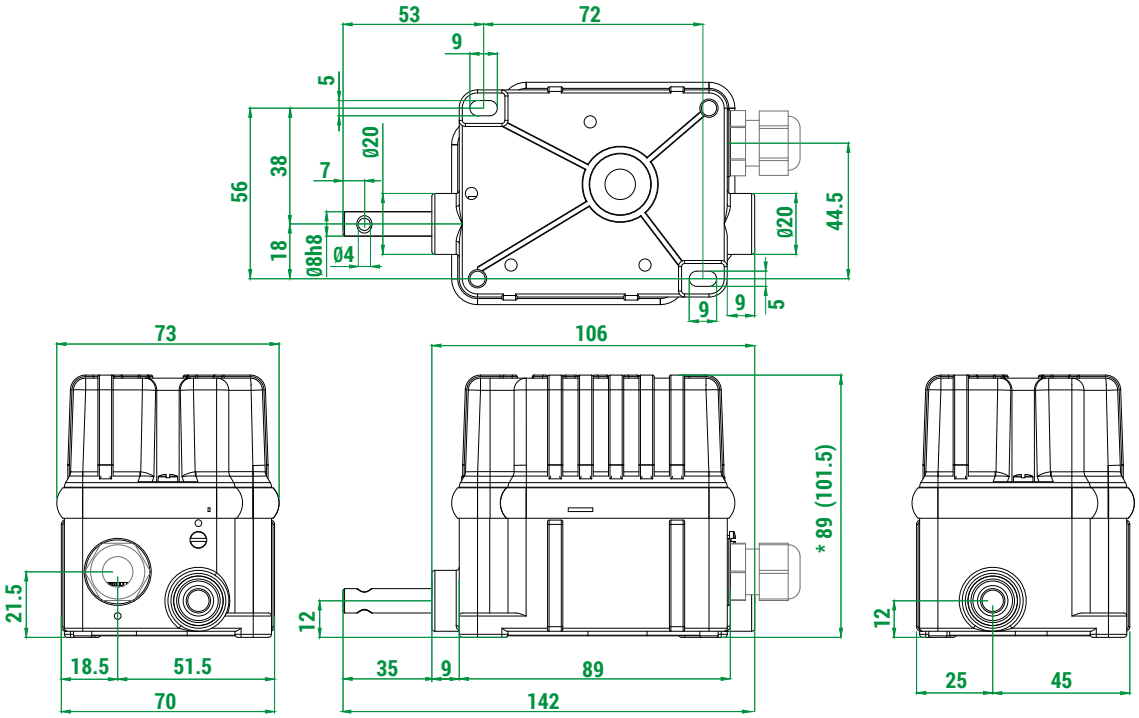

IP 42 or IP 65 with 12mm high flange

* 2 switches PRSL0003XX / PRSL0011XX / PRSL0017XX / PRSL0195XX or 1 switch PRSL0455PI.
( ) 3/4 switches PRSL0003XX / PRSL0011XX / PRSL0017XX / PRSL0195XX.

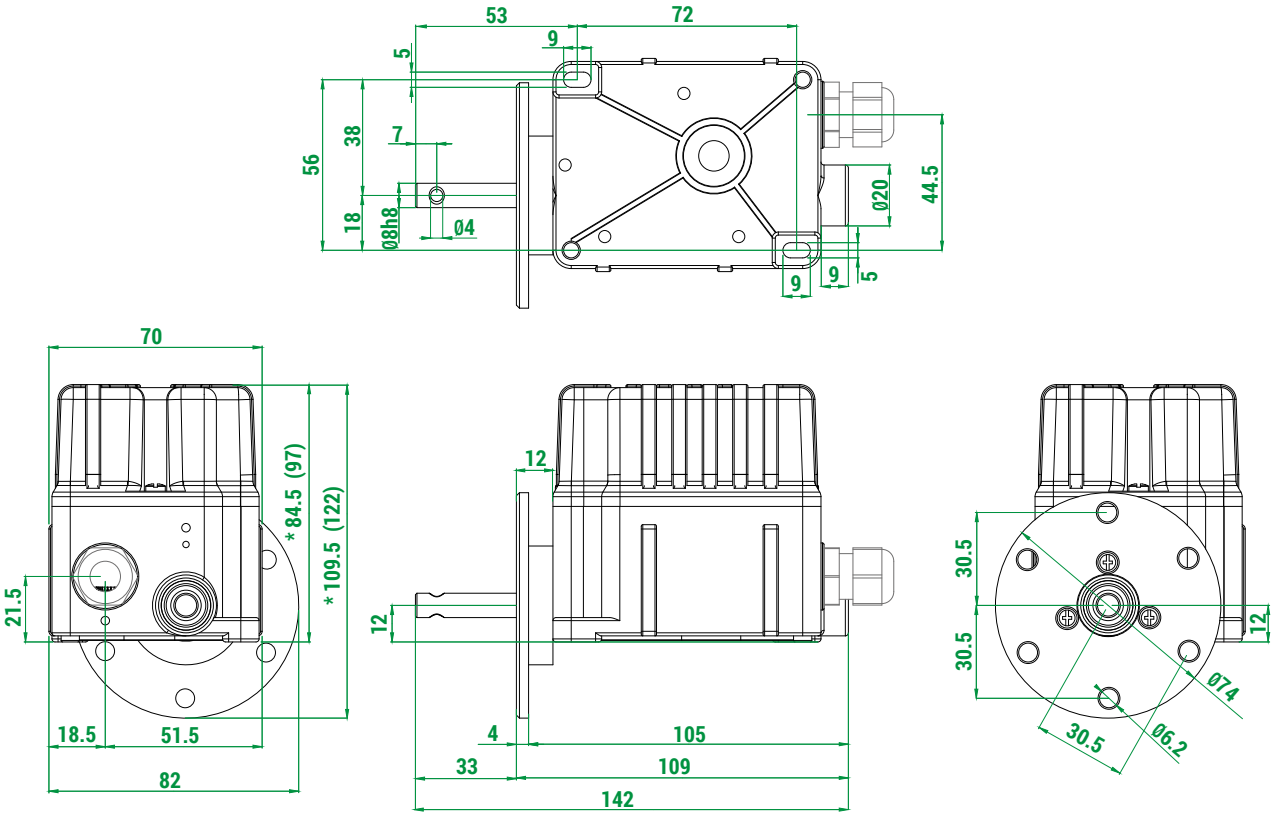

IP 65 / IP 66 / IP 67 / IP 69K with 12 mm high flange

* 2/3 switches PRSL0003XX / PRSL0011XX / PRSL0017XX / PRSL0195XX or 1 switch PRSL0455PI.
( ) 4 switches PRSL0003XX / PRSL0011XX / PRSL0017XX / PRSL0195XX.

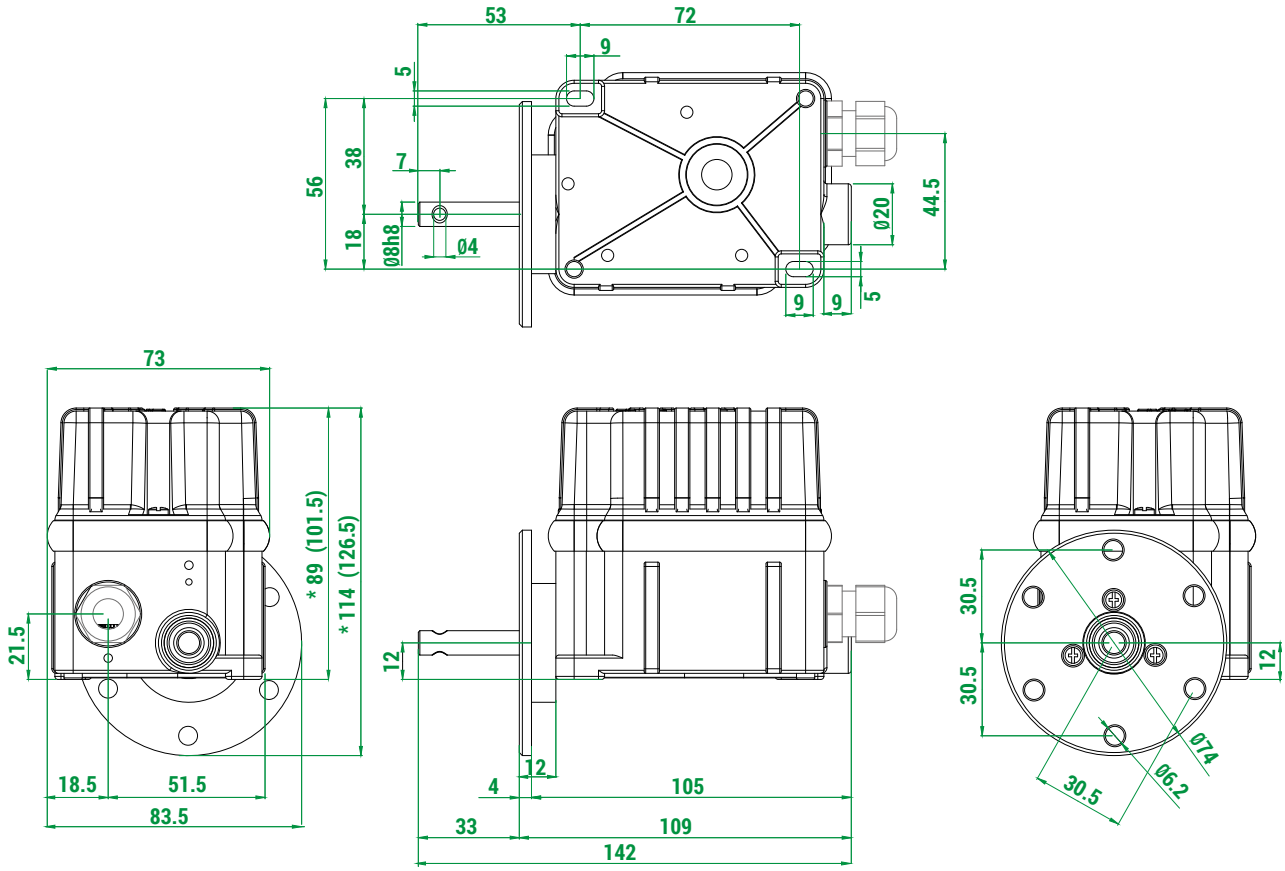

IP 42 or IP 65 with 22 mm high flange

* 2 switches PRSL0003XX / PRSL0011XX / PRSL0017XX / PRSL0195XX or 1 switch PRSL0455PI.
( ) 3/4 switches PRSL0003XX / PRSL0011XX / PRSL0017XX / PRSL0195XX.

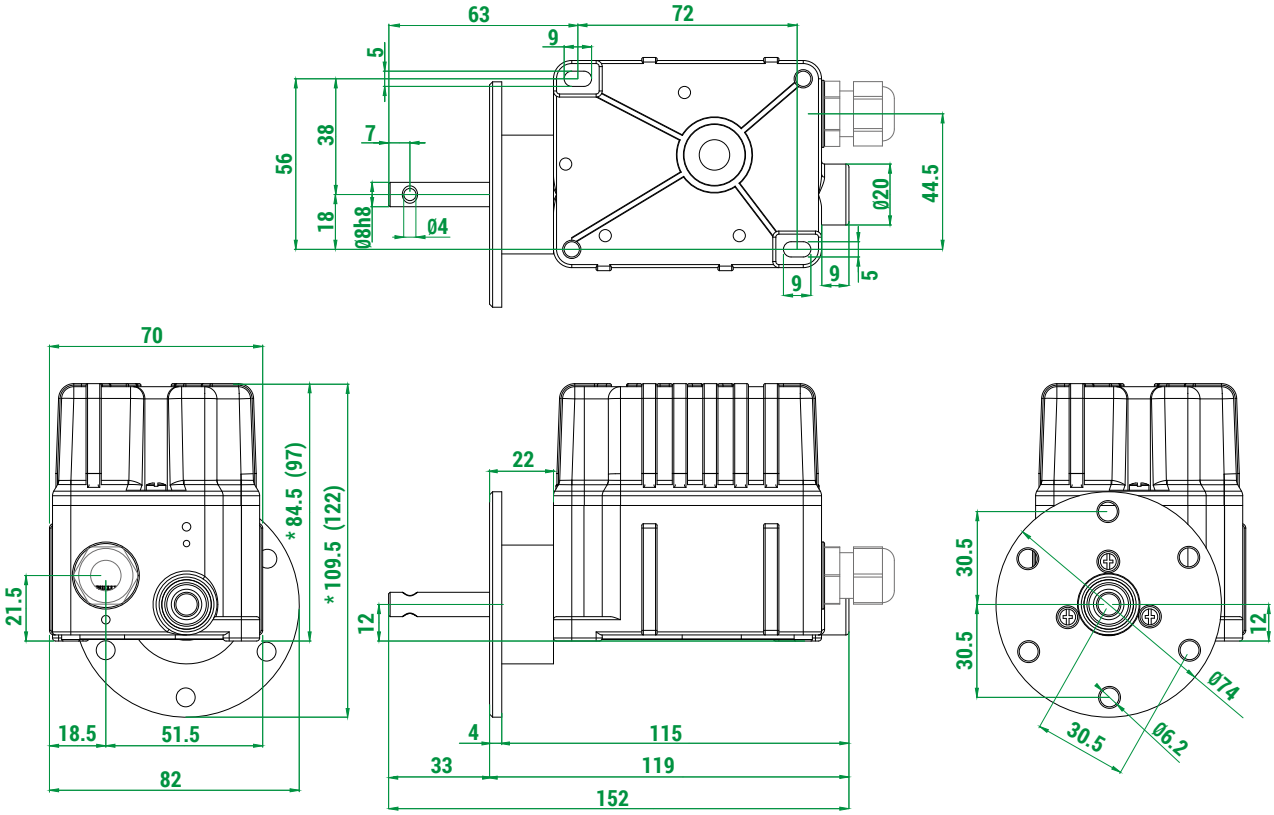

IP 65 / IP 66 / IP 67 / IP 69K with 22 mm high flange

* 2/3 switches PRSL0003XX / PRSL0011XX / PRSL0017XX / PRSL0195XX or 1 switch PRSL0455PI.
( ) 4 switches PRSL0003XX / PRSL0011XX / PRSL0017XX / PRSL0195XX.

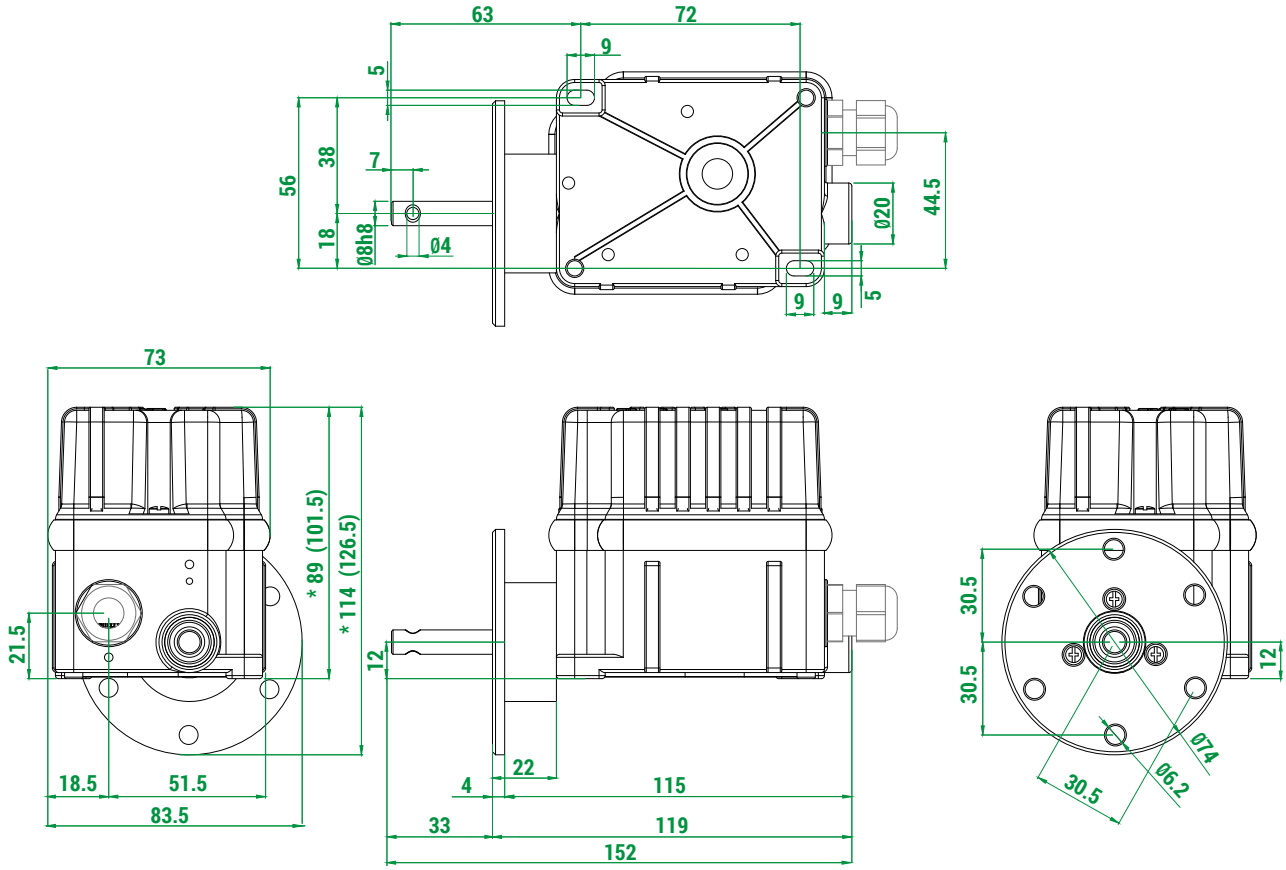

STANDARD LIMIT SWITCHES

Standard limit switches are equipped with cams PRSL7140PI and auxiliary control switches PRSL0003XX with 1NO+1NC contacts

.

Rated revolution ratio	Real revolution ratio	No. of cams and switches	IP 42 CE	IP 65 CE	IP 65 / IP 66 / IP 67 / IP 69K CE cULus
			Code	Code	Code
1:15	1:15.82	2	PFA9142A0015001	PFA9165A0015003	PFA9067A0015001
		3	PFA9142A0015003	PFA9165A0015004	PFA9067A0015003
		4	PFA9142A0015002	PFA9165A0015005	PFA9067A0015002
1:20	1:20.37	2	PFA9142A0020001	PFA9165A0020001	PFA9067A0020001
		3	PFA9142A0020003	PFA9165A0020003	PFA9067A0020003
		4	PFA9142A0020002	PFA9165A0020002	PFA9067A0020002
1:25	1:25.96	2	PFA9142A0025001	PFA9165A0025004	PFA9067A0025001
		3	PFA9142A0025003	PFA9165A0025005	PFA9067A0025003
		4	PFA9142A0025002	PFA9165A0025006	PFA9067A0025002
1:50	1:50	2	PFA9142A0050001	PFA9165A0050002	PFA9067A0050001
		3	PFA9142A0050003	PFA9165A0050003	PFA9067A0050003
		4	PFA9142A0050002	PFA9165A0050004	PFA9067A0050002
1:75	1:75	2	PFA9142A0075001	PFA9165A0075001	PFA9067A0075001
		3	PFA9142A0075003	PFA9165A0075003	PFA9067A0075003
		4	PFA9142A0075002	PFA9165A0075002	PFA9067A0075002
1:100	1:103.57	2	PFA9142A0103001	PFA9165A0103001	PFA9067A0103001
		3	PFA9142A0103003	PFA9165A0103003	PFA9067A0103003
		4	PFA9142A0103002	PFA9165A0103002	PFA9067A0103002
1:150	1:158.02	2	PFA9142A0158001	PFA9165A0158001	PFA9067A0158001
		3	PFA9142A0158003	PFA9165A0158003	PFA9067A0158003
		4	PFA9142A0158002	PFA9165A0158002	PFA9067A0158002

ASSEMBLY DRAWING

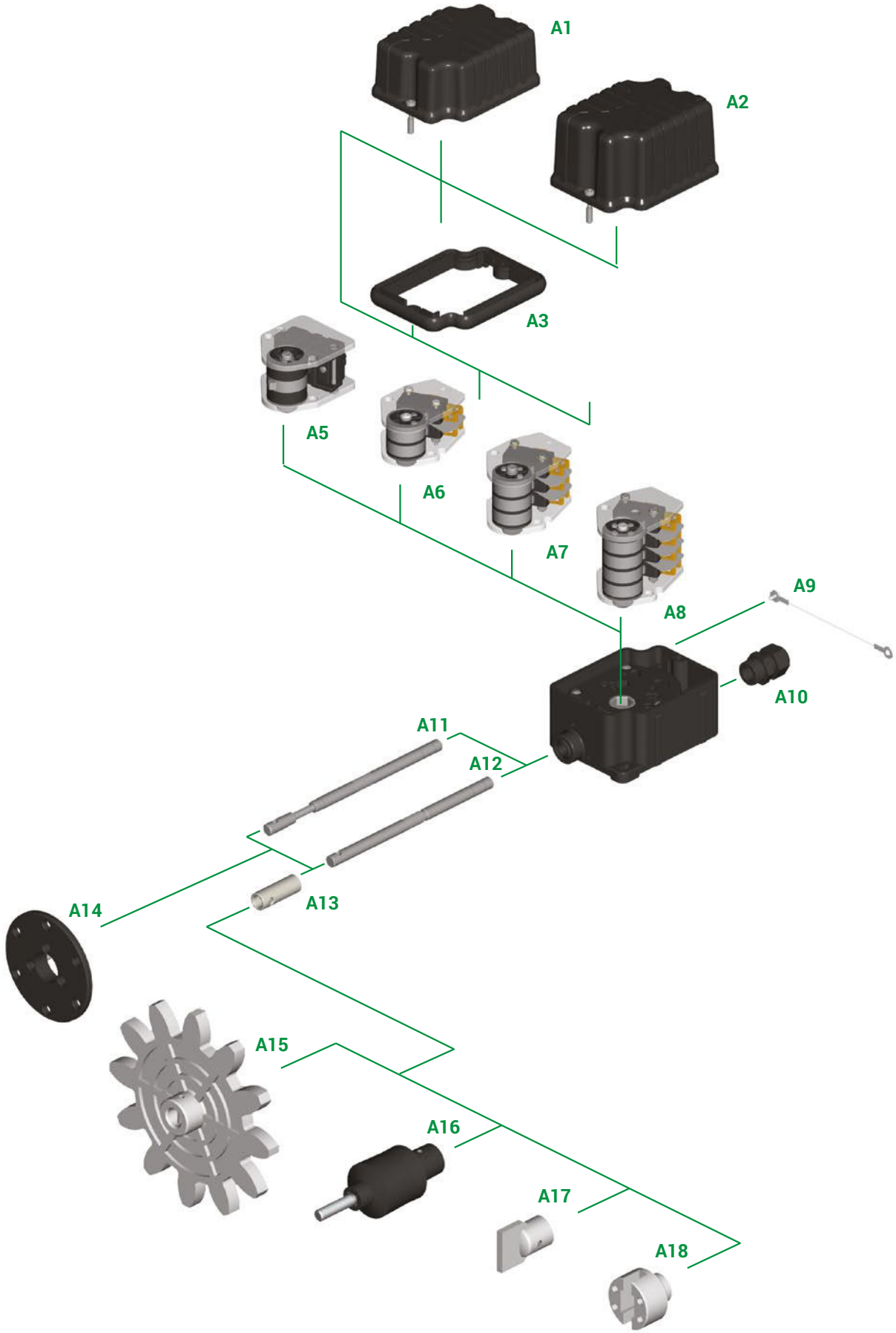

Refer to the following tables for descriptions of components: “Standard cam sets” and “Accessories”.

COMPONENTS

Standard cam sets

Ref.	Drawing	No. and type of cams	No. and type of switches	Code
A5		1 cam A	1 PRSL0455PI switch	PRFC0101PE
A6		2 cams A	2 PRSL0003XX switches	PRFC0008PEC
		2 cams C	2 PRSL0003XX switches	PRFC0009PEC
A7	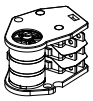	3 cams A	3 PRSL0003XX switches	PRFC0004PEC
		3 cams C	3 PRSL0003XX switches	PRFC0006PEC
A8		4 cams A	4 PRSL0003XX switches	PRFC0202PEC
		4 cams C	4 PRSL0003XX switches	PRFC0198PEC

Other sets of cams with 2/3/4/5 or 6 switches PRSL0003XX / PRSL0011XX / PRSL0017XX / PRSL0195XX or with 1 or 2 switches PRSL0455PI are available on request.

Cam reference chart

Cam			Switching angle	Code
A		1 point	20.5° ±0.5°	PRSL7140PI
B		10 points	14.0° ±0.5°	PRSL7142PI
C		60° sector	78.0° ±0.5°	PRSL7141PI
E		180° sector	199.5° ±0.5°	PRSL7144PI
H		335° sector	344.0° ±0.5°	PRSL7143PI

Accessories

Ref.	Drawing	Description	Code
A1	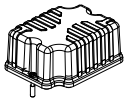	Cover without gasket with screws for Base IP 42 with 2 switches	PA090010
		Cover with gasket and screws for Base IP 65 with 2/3 switches	PA090013
		Cover with tightening rubber and screws for Base IP 65 / IP 66 / IP 67 / IP 69K with 2/3 switches	PA090012
A2	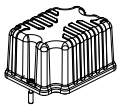	Cover without gasket with screws for Base IP 42 with 3/4 switches	PA090011
		Cover with gasket and screws for Base IP65 with 4 switches	PA090015
		Cover with tightening rubber and screws for Base IP 65 / IP 66 / IP 67 / IP 69K with 4 switches	PA090014
A3	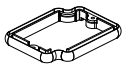	Tightening rubber for Base IP 65 / IP 66 / IP 67 / IP 69K	PRGU1200PE
A9	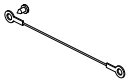	Cover holding wire + screw (bag with 10 pieces)	PRSL0358PI
A10		Cable gland M16	PRPS0062PE

Accessories

Ref.	Drawing	Description	Code
A11		Flexible shaft	ALL1F00001
A12	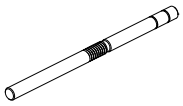	Standard shaft	ALL1R00001
		Shaft for 22 mm high flange	ALL1R00121
A13		Bush Ø 8 to Ø 12 for pinion gear/coupling	PRTO1075PE
A14	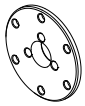	12 mm high flange	PRTO4040PE
		22 mm high flange	PRSL8087PI
A15	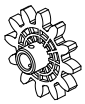	Pinion gear	See pinion gear tables
A16	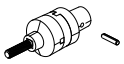	Coupling with pin	PRSL0981PI
A17		Male coupling with pin	PRSL0919PI
A18		Female coupling with pin	PRSL0920PI

Moulded pinion gears

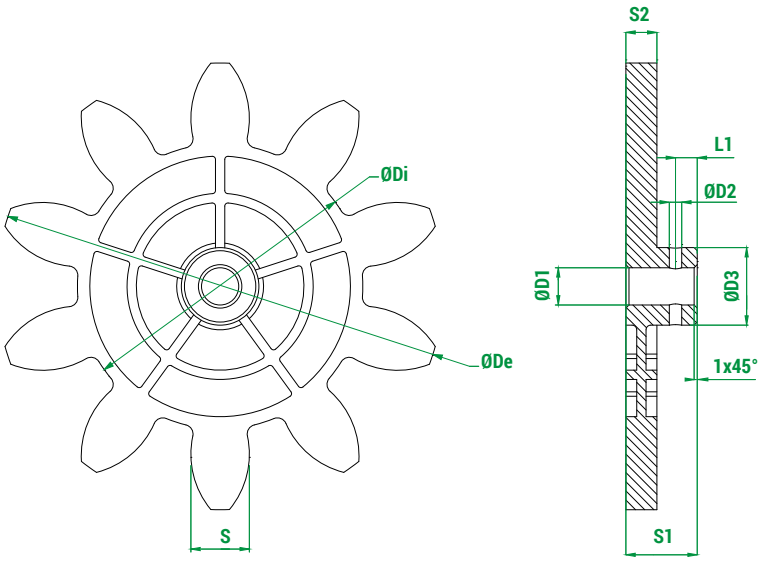

Legend	
Z	Number of teeth
M	Module
Dp	Primitive diameter
De	External diameter
Di	Internal diameter
a	Addendum
d	Dedendum
Alpha	Pressure angle

Code	Z	M	Dp	De	Di	a	d	S	Alpha	D1	D2	D3	S1	S2	L1
PRSL0855PI	8	24.00	192.00	240.00	136.00	24.00	28.00	38.1	20.00	12.00	4.00	24.00	23.00	10.00	7.00
PRSL0971PI	8	2.50	20.00	25.00	14.15	2.50	2.93	3.93	20.00	8.00	2.50	14.00	18.00	8.00	4.00
PRSL0915PI	8	20.00	160.00	200.00	113.20	20.00	23.40	31.41	20.00	12.00	4.00	24.00	23.00	10.00	7.00
PRSL0964PI	9	2.50	22.50	27.50	16.25	2.50	3.13	3.93	20.00	8.00	2.50	13.50	18.00	8.00	4.00
PRSL0963PI	9	3.50	31.50	38.50	23.40	3.50	4.10	4.71	20.00	8.00	2.50	14.00	18.00	8.00	4.00
PRSL0892PI	9	5.00	45.00	56.00	36.00	5.50	4.50	9.19	20.00	8.00	2.50	16.00	18.00	8.00	4.00
PRSL0968PI	10	3.00	30.00	36.00	23.00	3.00	3.51	4.71	20.00	8.00	2.50	14.00	18.00	8.00	4.00
PRSL0912PI	10	12.00	120.00	144.00	92.00	12.00	14.00	18.85	20.00	12.00	4.00	25.00	23.00	10.00	7.00
PRSL0913PI	10	14.00	140.00	168.00	107.24	14.00	16.38	21.99	20.00	12.00	4.00	24.60	23.00	10.00	7.00
PRSL0914PI	10	16.00	160.00	192.00	122.67	16.00	18.67	25.13	20.00	12.00	4.00	24.00	23.00	10.00	7.00
PRSL0917PI	11	6.00	66.00	78.00	51.96	6.00	7.02	9.42	20.00	12.00	4.00	19.00	23.00	8.00	7.00
PRSL0916PI	12	5.00	60.00	70.00	48.30	5.00	5.83	7.85	20.00	12.00	4.00	20.00	23.00	8.00	7.00
PRSL0918PI	12	8.00	96.00	112.00	77.28	8.00	9.36	12.56	20.00	12.00	4.00	21.50	23.50	10.00	7.00
PRSL0911PI	12	10.00	120.00	140.00	96.67	10.00	11.67	15.71	20.00	12.00	4.00	25.00	23.50	10.00	7.00
PRSL0944PI	12	12.00	144.00	168.00	116.00	12.00	14.00	18.85	20.00	12.00	4.00	24.00	23.00	10.00	7.00

Measuring unit: mm.

Waterjet cut pinion gears

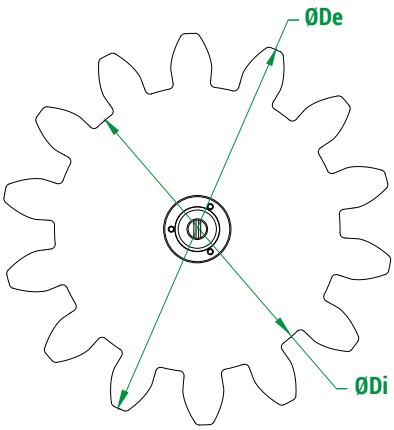

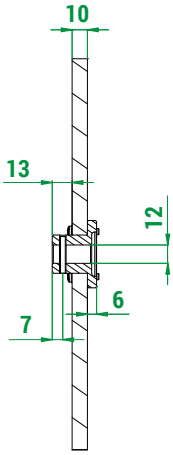

Legend	
Z	Number of teeth
M	Module
Dp	Primitive diameter
De	External diameter
Di	Internal diameter
a	Addendum
d	Dedendum
Alpha	Pressure angle

Code	Z	M	Dp	De	Di	a	d	Alpha
PRSL0857PI	8	18.00	144.00	180.00	102.00	18.00	21.00	20.00
PRSL0992PI	9	10.00	90.00	110.00	66.67	10.00	11.67	20.00
PRSL0879PI	9	16.00	144.00	176.00	106.67	16.00	18.67	20.00
PRSL0854PI	9	18.00	162.00	198.00	120.00	18.00	21.00	20.00
PRSL0871PI	9	20.00	180.00	220.00	133.33	20.00	23.33	20.00
PRSL0849PI	9	24.00	216.00	264.00	160.00	24.00	28.00	20.00
PRSL0846PI	10	10.00	100.00	120.00	76.67	10.00	11.67	20.00
PRSL0993PI	10	18.00	180.00	216.00	138.00	18.00	21.00	20.00
PRSL0970PI	10	22.00	220.00	264.00	168.52	22.00	25.74	20.00
PRSL0856PI	10	24.00	240.00	288.00	18..00	24.00	28.00	20.00
PRSL0861PI	11	12.00	132.00	156.00	104.00	12.00	14.00	20.00
PRSL0998PI	11	18.00	198.00	234.00	156.00	18.00	21.00	20.00
PRSL0997PI	11	20.00	220.00	260.00	173.36	20.00	23.32	20.00
PRSL0859PI	11	24.00	264.00	312.00	204.00	24.00	30.00	20.00
PRSL0863PI	12	14.00	168.00	196.00	133.00	14.00	17.50	20.00
PRSL0897PI	12	16.00	192.00	224.00	154.67	16.00	18.67	20.00
PRSL0972PI	12	18.00	216.00	252.00	173.88	18.00	21.06	20.00
PRSL0845PI	12	20.00	240.00	280.00	193.34	20.00	23.32	20.00
PRSL0878PI	12	24.00	288.00	336.00	232.00	24.00	28.00	20.00
PRSL0860PI	13	6.00	78.00	90.00	63.00	6.00	7.50	20.00
PRSL0853PI	13	12.00	156.00	178.59	126.00	11.29	15.00	20.00
PRSL0898PI	13	16.00	208.00	240.00	170.67	16.00	18.66	20.00
PRSL0862PI	14	10.00	140.00	169.00	125.00	15.00	7.50	20.00
PRSL0896PI	14	16.00	224.00	256.00	186.67	16.00	18.67	20.00
PRSL0999PI	14	18.00	252.00	288.00	210.00	18.00	21.00	20.00
PRSL0848PI	14	20.00	280.00	320.00	233.33	20.00	23.33	20.00
PRSL0858PI	15	18.00	270.00	306.00	228.00	18.00	21.00	20.00
PRSL0847PI	16	20.00	320.00	360.00	273.33	20.00	23.33	20.00
PRSL0973PI	17	10.00	170.00	190.00	145.00	10.00	12.50	22.89
PRSL0974PI	17	14.00	238.00	266.00	203.00	14.00	17.50	22.89
PRSL0851PI	20	6.00	120.00	132.00	105.00	6.00	7.50	22.89

Measuring unit: mm.

BASE - REQUEST FORM FOR NON STANDARD LIMIT SWITCH

Instructions

(See next page for list of components and legends)

1. **Version**: tick the required version.
   ATTENTION: limit switches with sets of cams and 5 or 6 switches PRSL0003XX / PRSL0011XX / PRSL0017XX / PRSL0195XX or with 2 switches PRSL0455PI are available only with protection degree IP 65 / IP 66 / IP 67 / IP 69K and a special cover, or in the IP 00 version without cover. Both configurations are not cURus certified.
   Limit switches with switches PRSL0455PI are not cURus certified.
2. **Standard cam set**: write the code of the cam set required, according to the legend.
3. **Customized cam set**: for non standard cam sets, fill in the scheme choosing the cams and the switches required, according to the legends. In case switch PRSL0455PI is required, it is possible to use max. 2 switches.
   Customized cams are available on request.
4. **Anti-moisture plug**: tick when the anti-moisture plug is required.
   ATTENTION: limit switches with anti-moisture plug are not cURus certified.
5. **Cover holding wire:** tick when the cover holding wire is required.
6. **Revolution ratio**: tick or write the required revolution ratio.
7. **Shaft**: tick the type of shaft required.
   Customized shafts are available on request.
8. **Coupling, flange, pinion gear**: tick the appropriate box when coupling, flange or pinion gear are required.
   When a standard pinion gear is required, write the code number listed in the pinion gear tables in the catalogue.
   When a special pinion gear is required, write the number of teeth, the module and the primitive diameter.

Version 1

- ☐ IP 00 (without cover) CE
- ☐ IP 42 CE
- ☐ IP 65 CE
- ☐ IP 65 / IP 66 / IP 67 / IP 69K CE cULus

Standard cam set 2

Cam set code

_____

Customized cam set 3

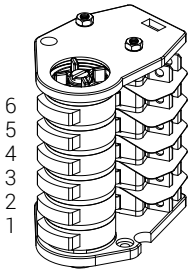

Cam code	Switch code
6	
5	
4	
3	
2	
1	

Anti-moisture plug 4

☐

Cover holding wire 5

☐

Revolution ratio 6

- ☐ 1:15
- ☐ 1:20
- ☐ 1:25
- ☐ 1:50
- ☐ 1:75
- ☐ 1:100
- ☐ 1:150
- ☐ 1: _____

☐ Standard shaft 7

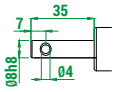

☐ Flexible shaft

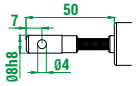

8

- ☐ **Male coupling**
- ☐ **Female coupling**
- ☐ **Coupling**
- ☐ **12 mm high flange**
- ☐ **22 mm high flange**
- ☐ **Pinion gear**

Pinion gear code _____

Customized pinion gear

No. of teeth _____

Module _____

Primitive diameter _____

Remarks

_____

2 Legend - Standard cam sets

No. & type of switches	No. & type of cams	Cam set code
1 x PRSL0455PI	1 cam A	PRFC0101PE
2 x PRSL0003XX	2 cams A	PRFC0008PEC
	2 cams C	PRFC0009PEC
3 x PRSL0003XX	3 cams A	PRFC0004PEC
	3 cams C	PRFC0006PEC
4 x PRSL0003XX	4 cams A	PRFC0202PEC
	4 cams C	PRFC0198PEC

3 Legend - Cams

Cam			Switching angle	Cam code
A		1 point	20,5° ±0,5°	PRSL7140PI
B		10 points	14,0° ±0,5°	PRSL7142PI
C		60° sector	78,0° ±0,5°	PRSL7141PI
E		180° sector	199,5° ±0,5°	PRSL7144PI
H		335° sector	344,0° ±0,5°	PRSL7143PI

3 Legend - Switches

Type of switch	Auxiliary control				Direct control
	PRSL0003XX	PRSL0011XX	PRSL0017XX	PRSL0195XX	PRSL0455PI
Utilisation category	AC 15 - B300	AC 15 - B300	AC 15 - C300	AC 15 - C300	AC 3
Connections	6.3 mm Faston taps	Screw-type terminals	Screw-type terminals	6.3 mm Faston taps	Screw-type terminals
Contacts	1NO+1NC	1NO+1NC	1NO+1NC	1NO+1NC	2NC